Capacitive Sensors - S26
Series 40 - NAMUR EN 60947-5-6 - StEx - ATEX

Process connection: G 1/2“
- For use in areas with the risk of gas explosion, zone 0
- For use in areas with the risk of dust explosion, zone 20
- Housing material: PEEK

DMT 03 ATEX E 048	IECEx BVS 07.0031
Ex II 1G Ex ia IIC T1-T6 Ga	Ex ia IIC T1-T6 Ga
Ex II 1D Ex ia IIIC T101°C Da	Ex ia IIIC T101°C Da

Technical data	Non-flush mountable
Level sensor, in contact with the product	Medium dependent adjustable
Operating distance min. / max. adjustable	0...10 mm
Electrical version	2-wire DC
Output function	NAMUR EN 60947-5-6
Type current	**KAS-40-26/104-N-G1/2-PEEK-Z10-1-HP-1G-1D**
Type	**KAS-40-26-N-K-G1/2”-PEEK-StEx**
Art.-No.	**KA 1536**
Operating voltage (U_B)	5 - 15 V DC, Ui = 15 V DC
Operating current active surface free	< typ 1.5 mA
Operating current active surface covered	> typ. 2.5 mA
Self-inductance (L)	0.2 mH
Self-capacitance (C)	250 nF
Permitted residual ripple max.	5 %
Frequency of operating cycles max.	50 Hz
Permitted ambient temperature	-20...+70 °C
LED-display	Yellow
Degree of protection IEC 60529	IP 67*
Connection cable	10 m, PVC, 2 x 0.14 mm²
Housing material	PEEK (FDA 21 CFR 177.2415)
Active surface	PEEK (FDA 21 CFR 177.2415)
Lid	PC (FDA 21 CFR 177.1580)
Media optimized	Yes
Accessory: Varivent Adapter, Welding Socket (Please see our range of accessories, not delivered with the sensor).	

* With sealed potentiometer screw

Capacitive Sensors S26 with hemi-spherical active surface for level control of products with a dielectric constant ε_r from 1,1. Products can be:

- Bulk material, like plastic granules, powder, cereals, etc.
- Liquids, like water, juice, wine, oil, chemicals or pharmaceutical solutions and much more.
- Pastes in the food processing industry, liquid glue, or resins, etc.

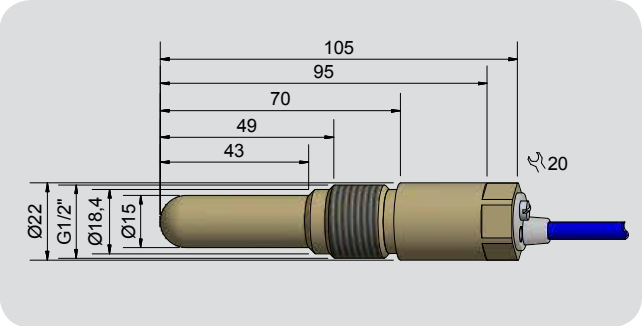

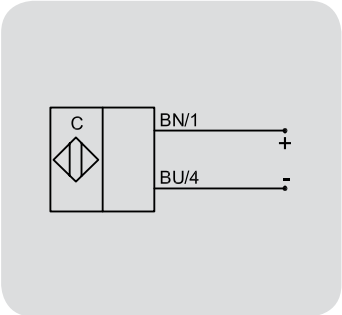

Made in Germany

All specifications are subject to change without notice. (09.01.2020)

RECHNER Industrie-Elektronik GmbH • Gaußstraße 6-10 • D-68623 Lampertheim • Tel. +49 6206 5007-0 • Fax +49 6206 5007-36 • e-mail: info@rechner-sensors.de • www.rechner-sensors.com